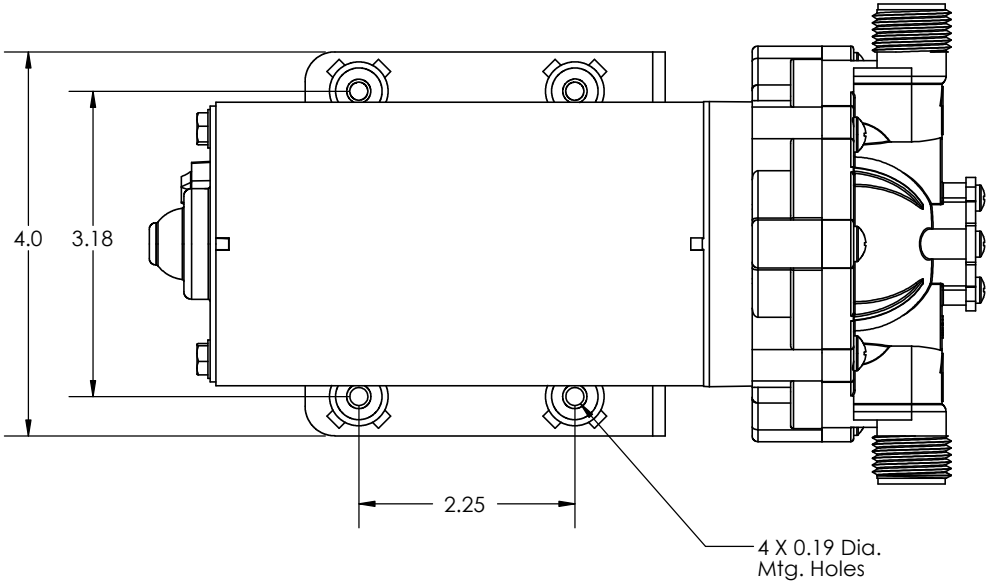

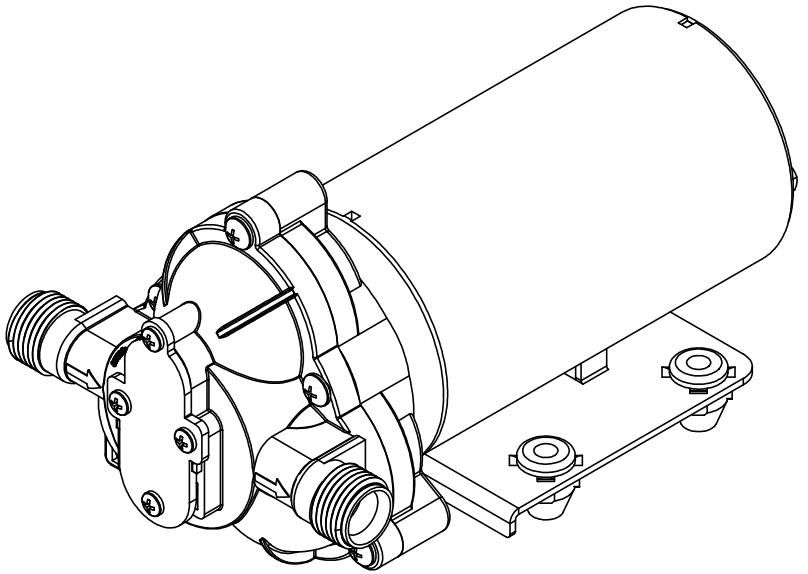

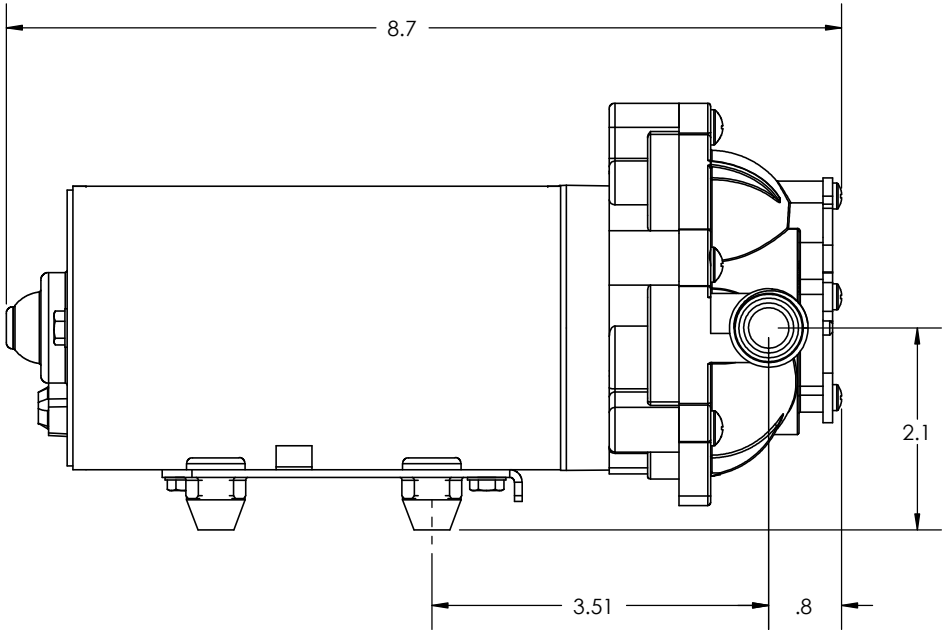

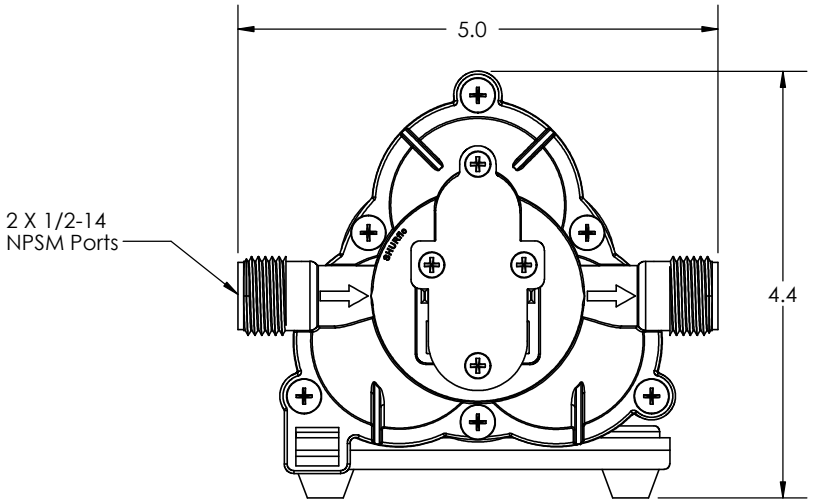

Installation Drawing 48

Wiring Removed For Clarity